SOD1H1 - SOD1H8

SURFACE MOUNT HIGH EFFICIENCY RECTIFIER DIODES

VOLTAGE RANGE: 50 - 1000V
CURRENT: 1.0A

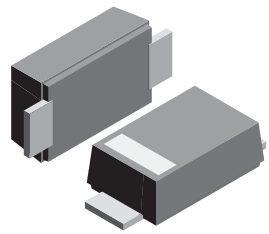

Features

- Glass passivated device
- Ideal for surface mouted applications
- Low reverse leakage
- Metallurgically bonded construction
- High temperature soldering guaranteed:
  250℃/10 seconds,0.375”(9.5mm) lead length,
  5 lbs. (2.3kg) tension

Mechanical Data

- Case: SOD-123FL
  plastic body over passivated junction
- Terminals : Plated axial leads,
- solderable per MIL-STD-750, Method 2026
- Polarity : Color band denotes cathode end
- Mounting Position : Any
- Weight:0.0007 ounce, 0.02 grams

RoHS COMPLIANT

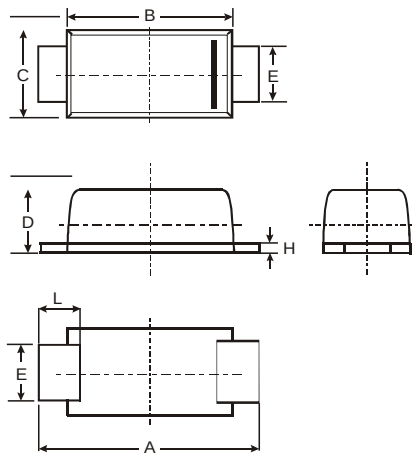

SOD-123FL			
Dim	**Min**	**Max**	**Typ**
A	3.50	3.80	3.65
B	2.60	2.90	2.75
C	1.70	1.90	1.80
D	0.09	1.10	1.00
E	0.08	1.10	0.095
H	0.12	0.20	0.16
L	0.07	0.09	0.08
All Dimensions in mm			

Maximum Ratings and Electrical Characteristics T_A = 25°C unless otherwise specified

Single phase, half wave, 60Hz, resistive or inductive load. For capacitive load, derate current by 20%.

Characteristic	Symbol	SOD1H1	SOD1H2	SOD1H3	SOD1H4	SOD1H5	SOD1H6	SOD1H7	SOD1H8	Unit
Maximum repetitive peak reverse voltage	V_{RRM}	50	100	200	300	400	600	800	1000	V
Maximum RMS voltage	V_{RMS}	35	70	140	210	280	420	560	700	V
Maximum DC blocking voltage	V_{DC}	50	100	200	300	400	600	800	1000	V
Maximum average forward rectified current at T_A=65°C (NOTE 1)	$I_{(AV)}$	1.0								A
Peak forward surge current 8.3ms single half sine-wave superimposed on rated load (JEDEC Method) T_L=25°C	I_{FSM}	25.0								A
Maximum instantaneous forward voltage at 1.0A	V_F	1.0			1.4		1.7			V
Maximum DC reverse current T_A=25°C at rated DC blocking voltage T_A=125°C	I_R	10.0 200.0								μA
Maximum reverse recovery time (NOTE 2)	trr	50					75			ns
Typical thermal resistance (NOTE 4)	$R_{\theta JA}$	180								K/W
Operating junction and storage temperature range	T_J,T_{STG}	-50 to +150								°C

Note: 1.Averaged over any 20ms period.
2.Measured with IF=0.5A, IR=1A, Irr=0.25A.
3.Measured at 1MHz and applied reverse voltage of 4.0V D.C.
4.Thermal resistance junction to ambient, 6.0 mm2 coppeer pads to each terminal.

RATINGS AND CHARACTERISTIC CURVES SOD1H1 THRU SOD1H8

FIG. 1 - TYPICAL FORWARD CURRENT DERATING CURVE

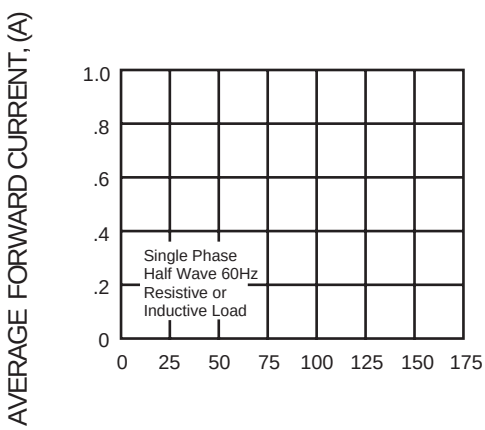

FIG. 2 - MAXIMUM NON-REPETITIVE FORWARD SURGE CURRENT

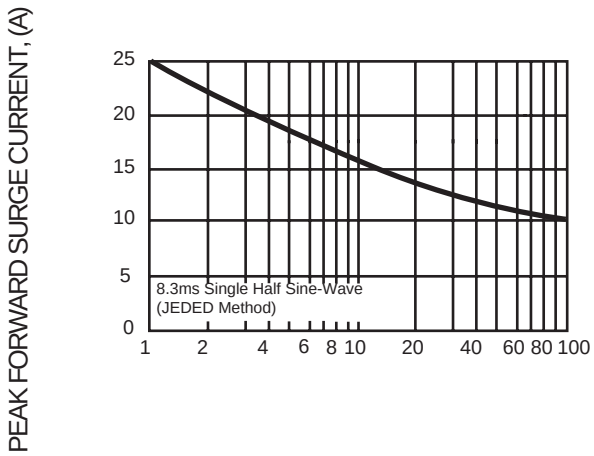

FIG. 3 - TYPICAL INSTANTANEOUS FORWARD CHARACTERISTICS

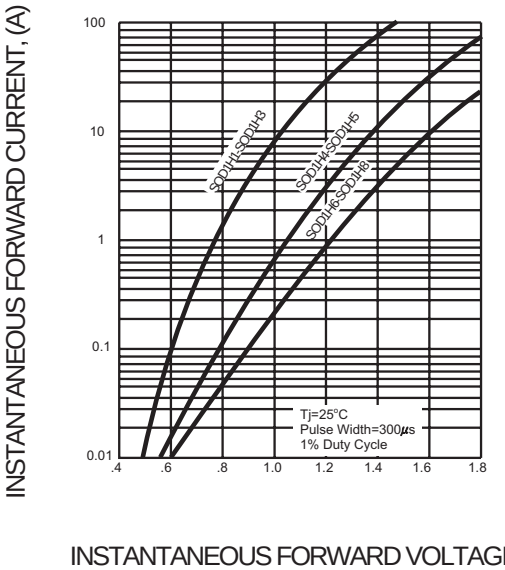

FIG. 4 - TYPICAL REVERSE CHARACTERISTICS

