SM712

Asymmetrical TVS Diode

SOT-23 Plastic-Encapsulate ESD Protection Diodes

Features

- 150W peak pulse power(8/20μs)
- Ultra low leakage：nA level
- Operating voltage：7V or 12V
- Low clamping voltage
- Complies with following standards:
  - – IEC 61000-4-2 (ESD) immunity test
    Air discharge: ±30kV
    Contact discharge: ±30kV
  - – IEC61000-4-4 (EFT) 40A (5/50ns)
  - – IEC61000-4-5 (Lightning) 7A (8/20μs)
- ◆ RoHS Com pliatn

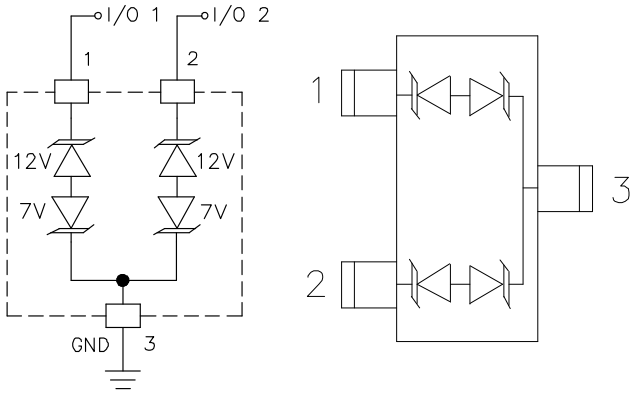

Circuit Schematic　　Pin Schematic

Dimensions and Pin Configuration

Mechanical Characteristics

- Package: SOT-23
- Lead Finish: Matte Tin
- Case Material: “Green” Molding Compound.
- UL Flammability Classification Rating 94V-0
- Moisture Sensitivity: Level 3 per J-STD-020
- Terminal Connections: See Diagram Below
- Marking Information: See Below

RoHS COMPLIANT

Applications

- Wireless System
- Networks
- Portable Instrumentation
- RS485 Ports

Maximum Ratings T_A = 25°C unless otherwise specified

Parameter	Symbol	Value	Unit
Peak Pulse Power(8/20μs)	Ppk	150	W
Peak Pulse Current(8/20μs)	I_{PP}	7	A
ESD per IEC 61000−4−2 (Air) ESD per IEC 61000−4−2 (Contact)	V_{ESD}	±30 ±30	kV
Operating Temperature Range	T_J	−55 to +125	°C
Storage Temperature Range	Tstg	−55 to +150	°C

Electrical Characteristics (T_A=25°C unless otherwise specified)

		Pin 1 to 3 and 2 to 3(12V TVS)			Pin 3to 1 and 3 to 2(7V TVS)				
Parameter	**Symbol**	**Min**	**Typ**	**Max**	**Min**	**Typ**	**Max**	**Unit**	**Test Condition**
Reverse Working Voltage	V_{RWM}			12			7	V	
Breakdown Voltage	V_{BR}	13.3			7.5			V	I_T = 1mA
Reverse Leakage Current	I_R		0.01	0.5		0.01	0.5	μA	V_R = V_{RWM}
Clamping Voltage	V_C			19			11	V	I_{PP} = 1A (8 x 20μs pulse)
Clamping Voltage	V_C			25			15	V	I_{PP} = 7A (8 x 20μs pulse)
Junction Capacitance	C_J			75			75	pF	VR=0, f=1MHz
Junction Capacitance	C_J		45			45		pF	VR=V_{RWM}, f=1MHz

Typical Performance Characteristics (T_A=25℃ unless otherwise Specified)

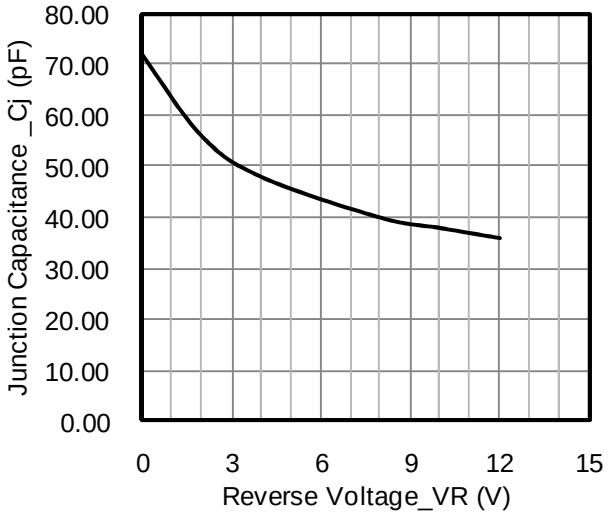

Junction Capacitance vs. Reverse Voltage

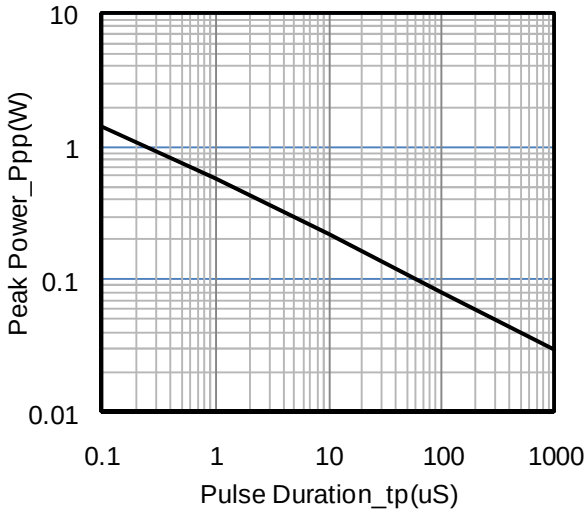

Peak Pulse Power vs. Pulse Time

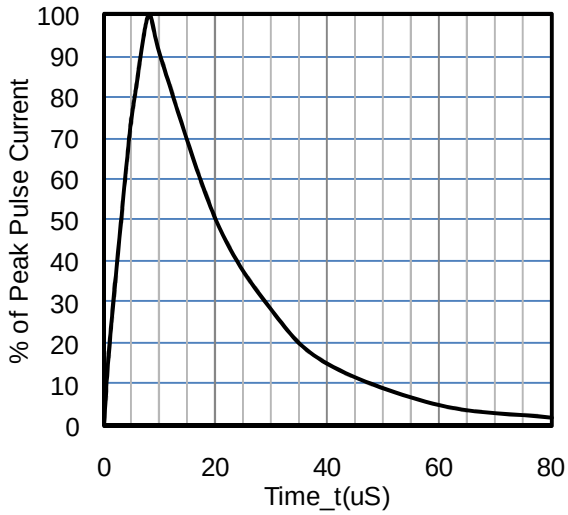

8X 20μs Pulse Waveform

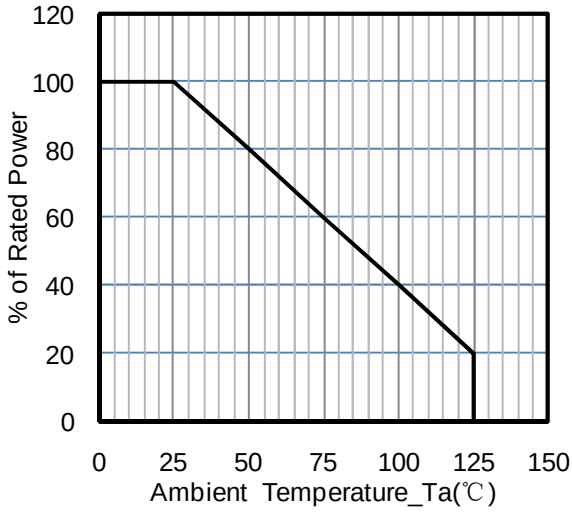

Power Derating Curve

SM712 on RS-485 Data Lines Application

EIA RS-485 specifies a ±7V ground difference between devices on the bus. This permits the bus voltage to range from +12V (5V + 7V) to -7V (0 - 7V). The PDCSM712L is designed to protect two RS-485 data lines in extended common mode applications. The PDCSM712L may be used to protect devices from transient voltages resulting from ESD, EFT, and lightning. The device is designed with asymmetrical operating voltages for optimum protection. The TVS diodes at pins 1 and 2 have a working voltage of 12 volts. These pins are connected to the differential data line pairs. The TVS diodes at pin 3 have a working voltage of 7 volts. Pin 3 is connected to ground. The internal TVS diodes of the PDCSM712L will protect the transceiver input from positive transient voltage spikes greater than 12V and negative spik es greater than 7V.

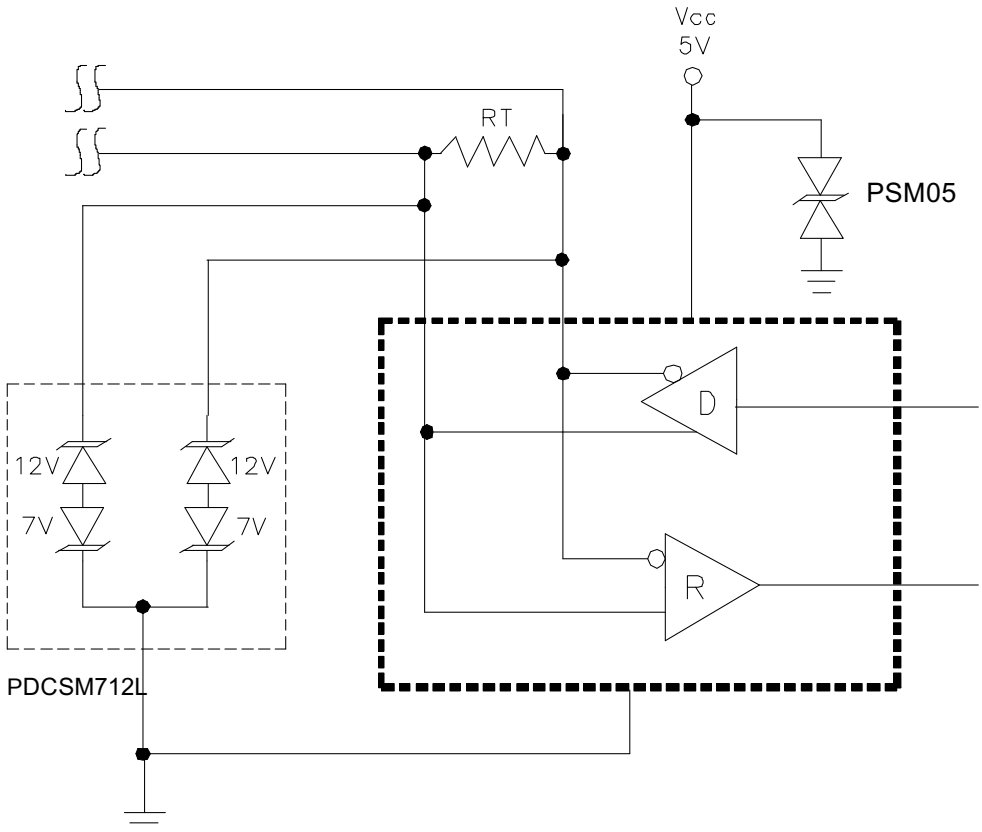

SOT-23 Package Outline Drawing

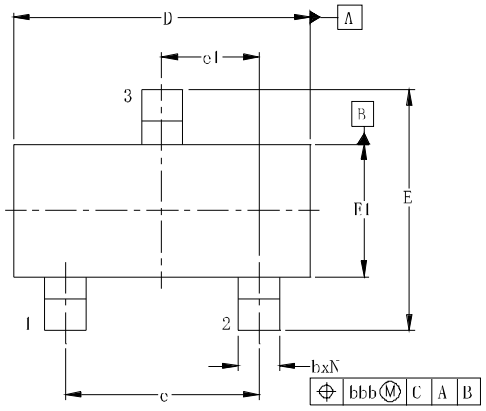

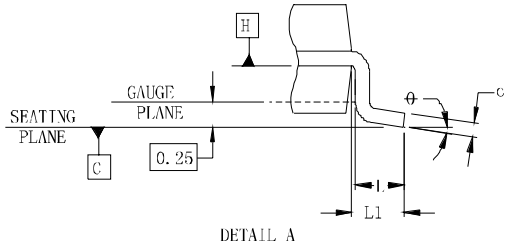

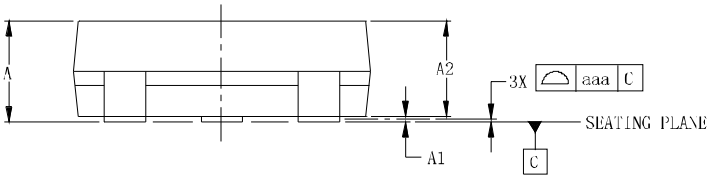

DIMENSIONS						
SYM	INCHES			MILLIMETERS		
	MIN	NOM	MAX	MIN	NOM	MAX
A	0.035	-	0.044	0.89	-	1.12
A1	0.000	-	0.004	0.01	-	0.10
A2	0.035	0.037	0.040	0.88	0.95	1.02
b	0.012	-	0.020	0.30	-	0.51
c	0.003	-	0.007	0.08	-	0.18
D	0.110	0.114	0.120	2.80	2.90	3.04
E	0.082	0.093	0.104	2.10	2.37	2.64
E1	0.047	0.051	0.055	1.20	1.30	1.40
e	0.075			1.90BSC		
e1	0.037			0.95BSC		
L	0.015	0.020	0.024	0.40	0.50	0.60
L1	0.022			0.55		
N	3			3		
θ	0°	-	8°	0°	-	8°
aaa	0.004			0.10		
bbb	0.008			0.20		

Suggested Land Pattern

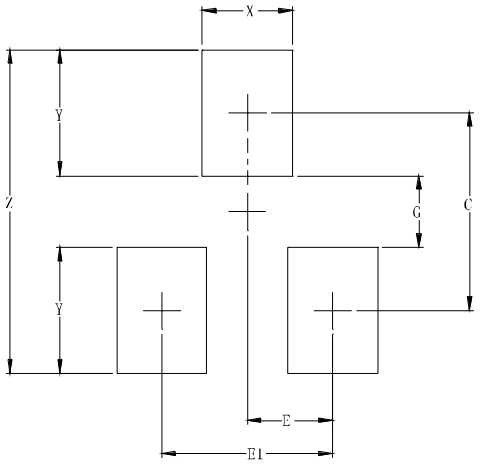

DIMENSIONS		
SYM	INCHES	MILLIMETERS
C	0.087	2.20
E	0.037	0.95
E1	0.075	1.90
G	0.031	0.80
X	0.039	1.00
Y	0.055	1.40
Z	0.141	3.60

Ordering Information

Part Number	Marking	Packaging	Reel Size
SM712	712	3000/Tape & Reel	7 inch