SOD1F1 - SOD1F7

SUFACE MOUNT FAST RECOVERY RECTIFIER DIODES

VOLTAGE RANGE: 50 - 1000V
CURRENT: 1.0A

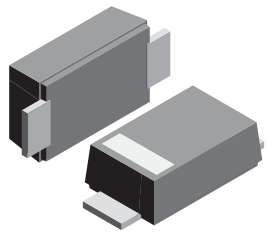

Features

- Glass passivated device
- Ideal for surface mouted applications
- Low reverse leakage
- Metallurgically bonded construction
- High temperature soldering guaranteed:
- 250℃/10 seconds,0.375”(9.5mm) lead length, 5 lbs. (2.3kg) tension

Mechanical Data

- Case: JEDEC SOD-123FL molded plastic body over passivated junction
- Terminals : Plated axial leads,
- solderable per MIL-STD-750, Method 2026
- Polarity : Color band denotes cathode end
- Mounting Position : Any
- Weight:0.0007 ounce, 0.02 grams

RoHS COMPLIANT

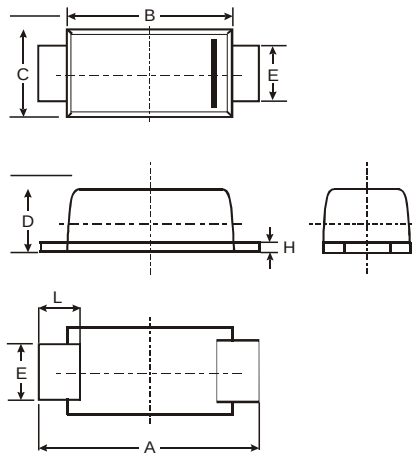

SOD-123FL			
Dim	Min	Max	Typ
A	3.50	3.80	3.65
B	2.60	2.90	2.75
C	1.70	1.90	1.80
D	0.09	1.10	1.00
E	0.08	1.10	0.095
H	0.12	0.20	0.16
L	0.07	0.09	0.08
All Dimensions in mm			

Maximum Ratings and Electrical Characteristics T_A = 25°C unless otherwise specified

Single phase, half wave, 60Hz, resistive or inductive load. For capacitive load, derate current by 20%.

Characteristic	Symbol	SOD1F1	SOD1F2	SOD1F3	SOD1F4	SOD1F5	SOD1F6	SOD1F7	Unit
Maximum repetitive peak reverse voltage	V_{RRM}	50	100	200	400	600	800	1000	V
Maximum RMS voltage	V_{RMS}	35	70	140	280	420	560	700	V
Maximum DC blocking voltage	V_{DC}	50	100	200	400	600	800	1000	V
Maximum average forward rectified current at T_A=65℃ (NOTE 1)	$I_{(AV)}$	1.0							A
Peak forward surge current 8.3ms single half sine-wave superimposed on rated load (JEDEC Method) T_L=25℃	I_{FSM}	30.0							A
Maximum instantaneous forward voltage at 1.0A	V_F	1.3							V
Maximum DC reverse current T_A=25℃ at rated DC blocking voltage T_A=100℃	I_R	5.0 100.0							μA
Maximum reverse recovery time (NOTE 2)	trr	150				250	500		ns
Typical junction capacitance (NOTE 3)	C_J	15							pF
Typical thermal resistance (NOTE 4)	$R_{\theta JA}$	180							K/W
Operating junction and storage temperature range	T_J,T_{STG}	-50 to +150							℃

Note: 1.Averaged over any 20ms period.
2.Measured with IF=0.5A, IR=1A, Irr=0.25A.
3.Measured at 1MHz and applied reverse voltage of 4.0V D.C.
4.Thermal resistance junction to ambient, 6.0 mm2 coppeer pads to each terminal.

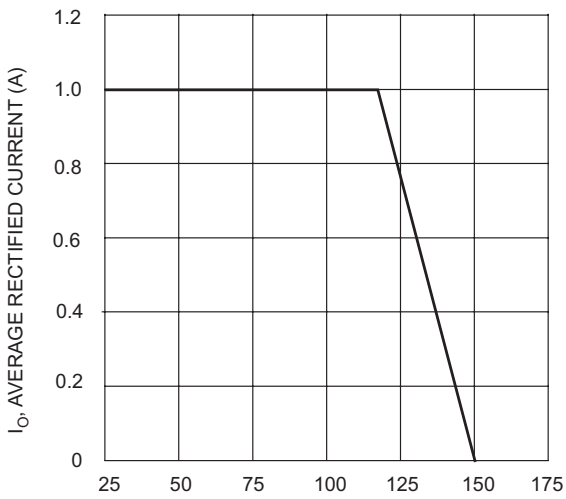

Fig. 1 Forward Current Derating Curve

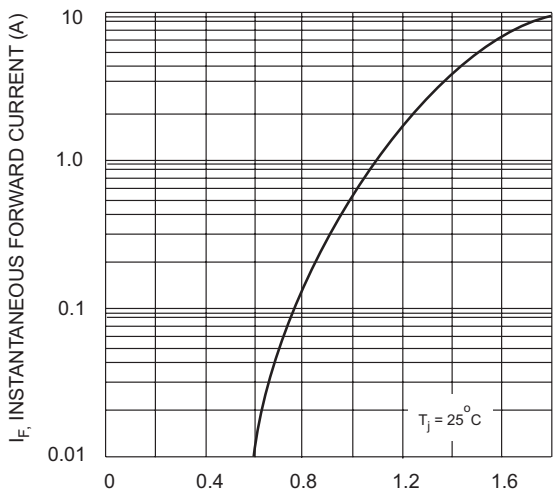

Fig. 2 Typical Forward Characteristics

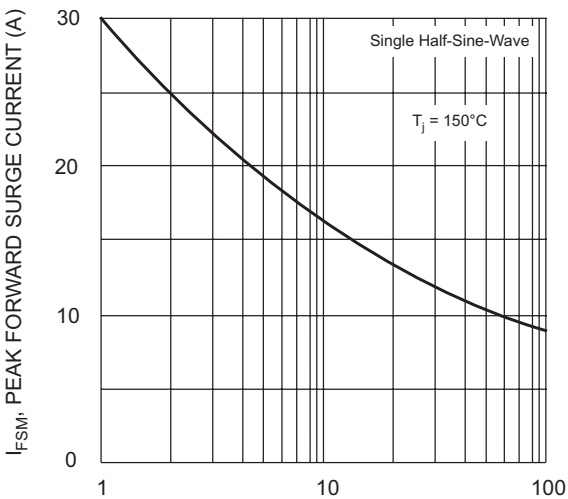

Fig. 3 Forward Surge Current Derating Curve

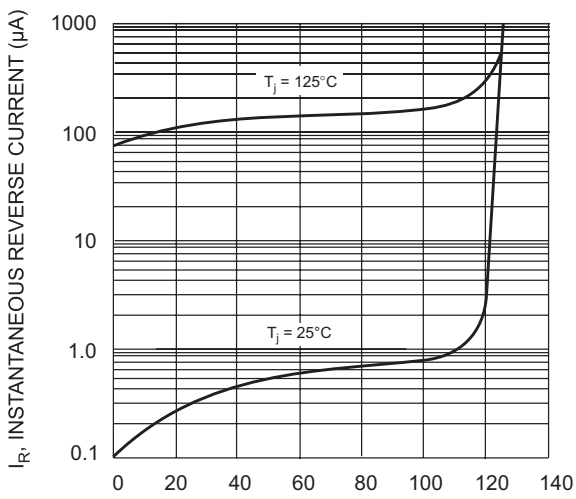

Fig. 4 Typical Reverse Characteristics

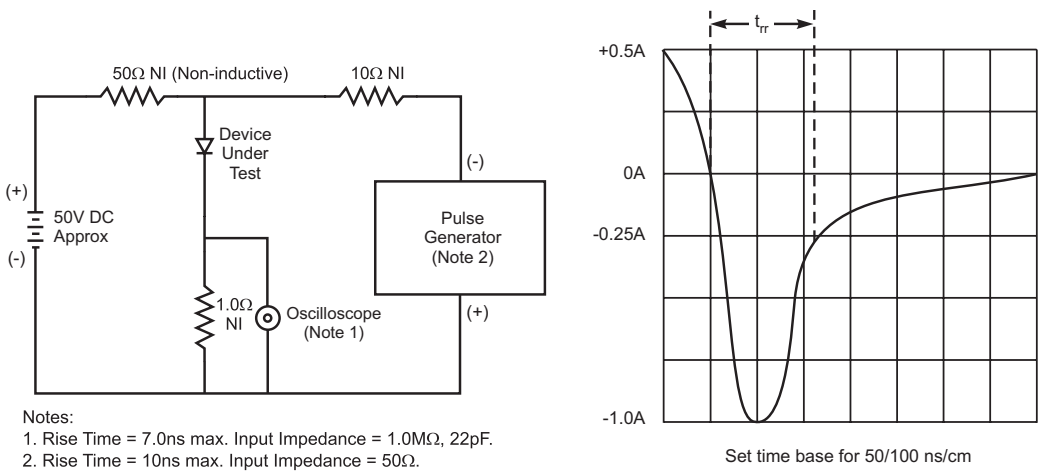

Notes:
1. Rise Time = 7.0ns max. Input Impedance = 1.0MΩ, 22pF.
2. Rise Time = 10ns max. Input Impedance = 50Ω.

Fig. 5 Reverse Recovery Time Characteristic and Test Circuit